ORTAL
YOUR LIFE. YOUR FIRE

110 TS

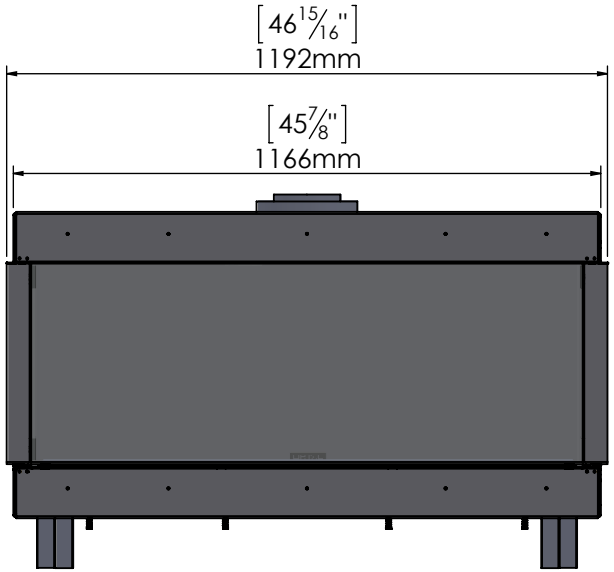

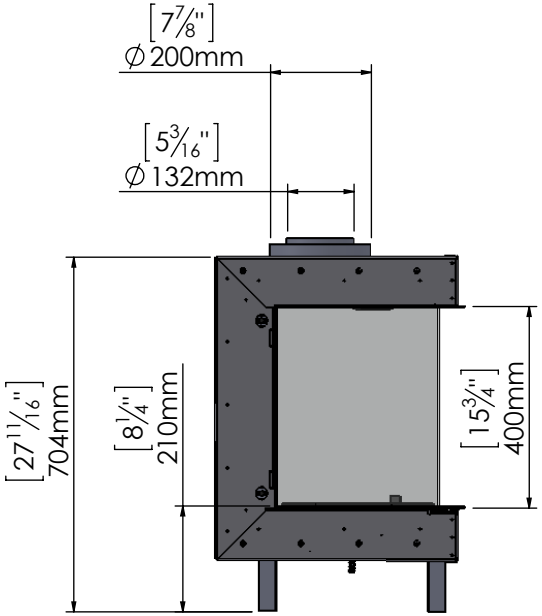

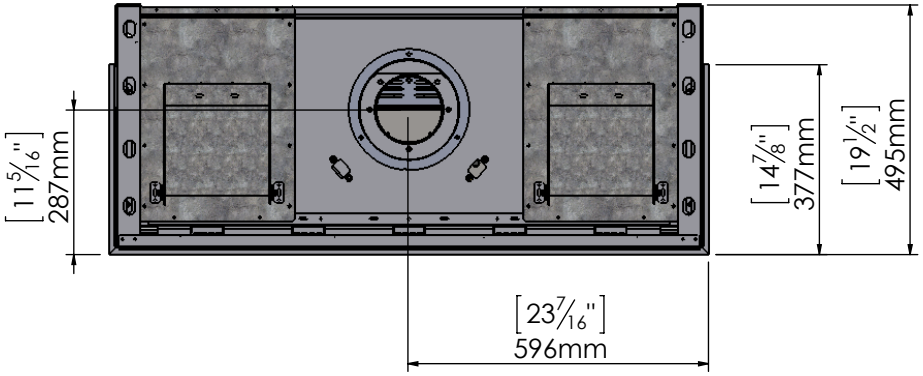

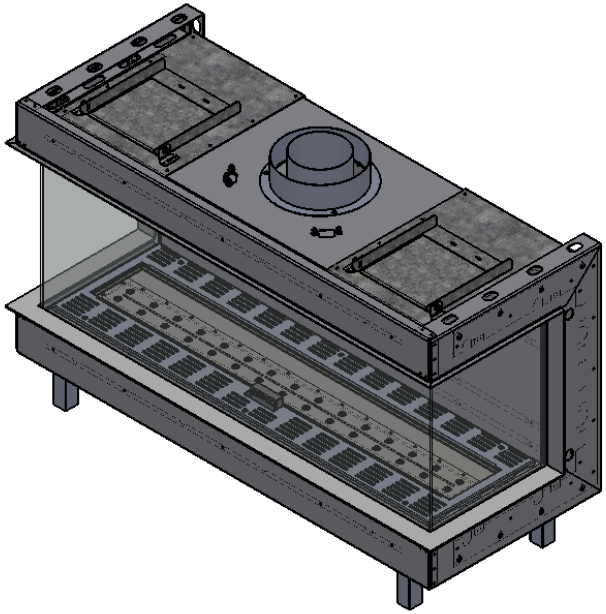

11/5/2017